biogeografie
uni bayreuth

Bayreuth Center of Ecology
and Environmental Research
BayCEER

UNIVERSITÄT
BAYREUTH
50
JAHRE

# BayByeMos

## Dashboard for mosquito-borne diseases in Bavaria | Germany

Climate-Sensitive Vector Dynamics
Modelling Workshop
Pre-workshop Webinar

**Dr. Stephanie Thomas**

16. November 2026



# The Project - BayByeMos

**Duration**: 3,5 years **Start**: 2022

**Funding**:
‚Joint Project Climate Change and Health‘
Bavarian State Ministries

**Partners**
Chair of Biogeography
Institute of Medical Management and Health Sciences



funded by
Bavarian State Ministry of
Health, Care and Prevention
and by
Bavarian State Ministry of the
Environment and Consumer Protection

Verbundprojekt
Klimawandel
und Gesundheit

IMG
INSTITUT FÜR MEDIZINMANAGEMENT
UND GESUNDHEITSWISSENSCHAFTEN

biogeografie
uni bayreuth

# The Project - BayByeMos

**Objectives**

1. Modelling
   *Aedes albopictus* risk of establishment
   Chikungunya and West Nile Virus transmission risk

2. Development of a dashboard

3. Quantitative and qualitative surveys to consult potential users



funded by
Bavarian State Ministry of Health, Care and Prevention
and by
Bavarian State Ministry of the Environment and Consumer Protection

Verbundprojekt Klimawandel und Gesundheit

IMG
INSTITUT FÜR MEDIZINMANAGEMENT UND GESUNDHEITSWISSENSCHAFTEN

biogeografie uni bayreuth

# Dashboard: West Nile Virus transmission risk

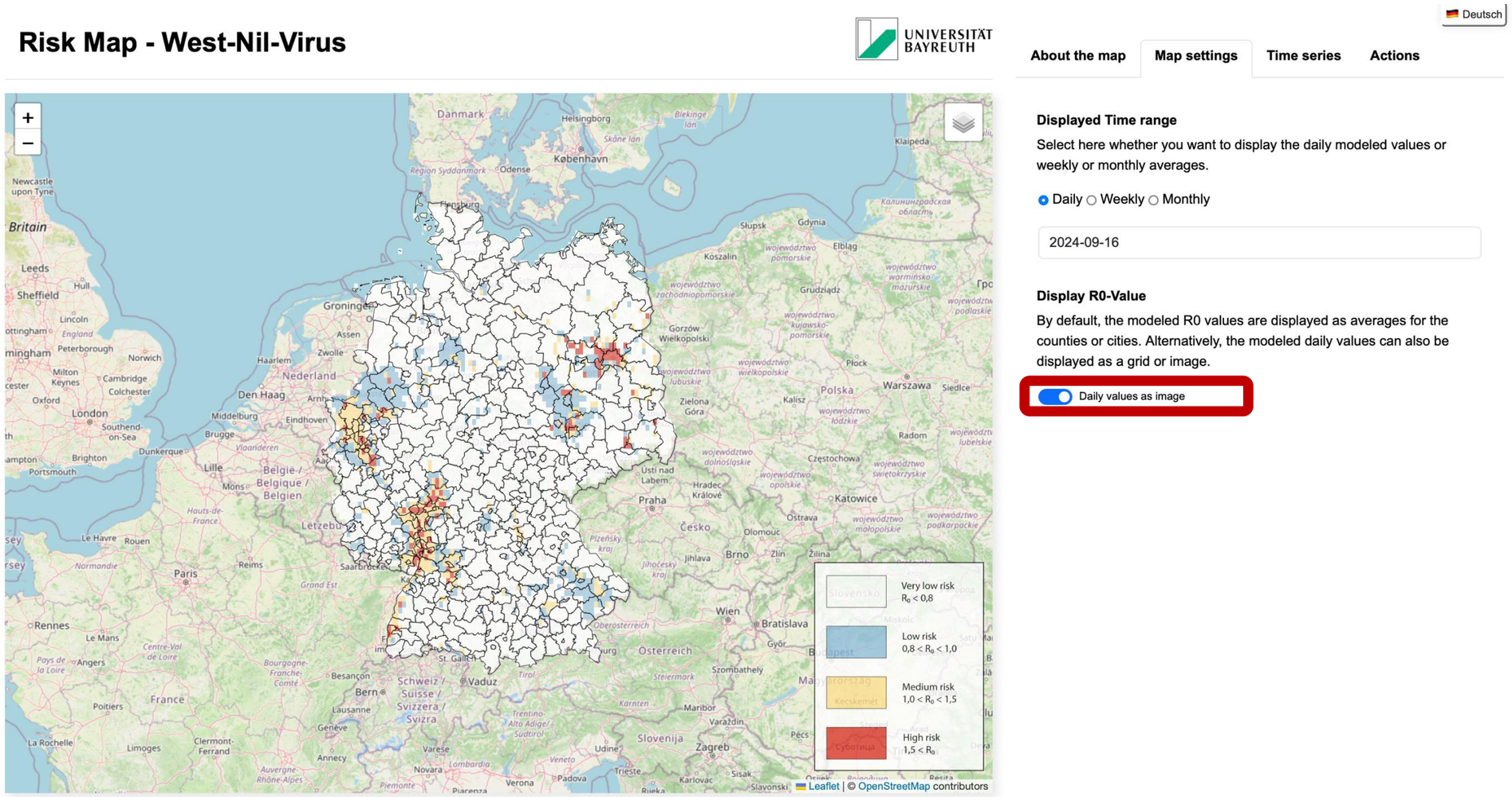


BayByeMos is a project of the Department of Biogeography and the Institute for Medical Management and Health Sciences of the University of Bayreuth.
The project is funded as part of the joint project "Climate Change and Health" in Bavaria (VKG).

# Dashboard: West Nile Virus transmission risk

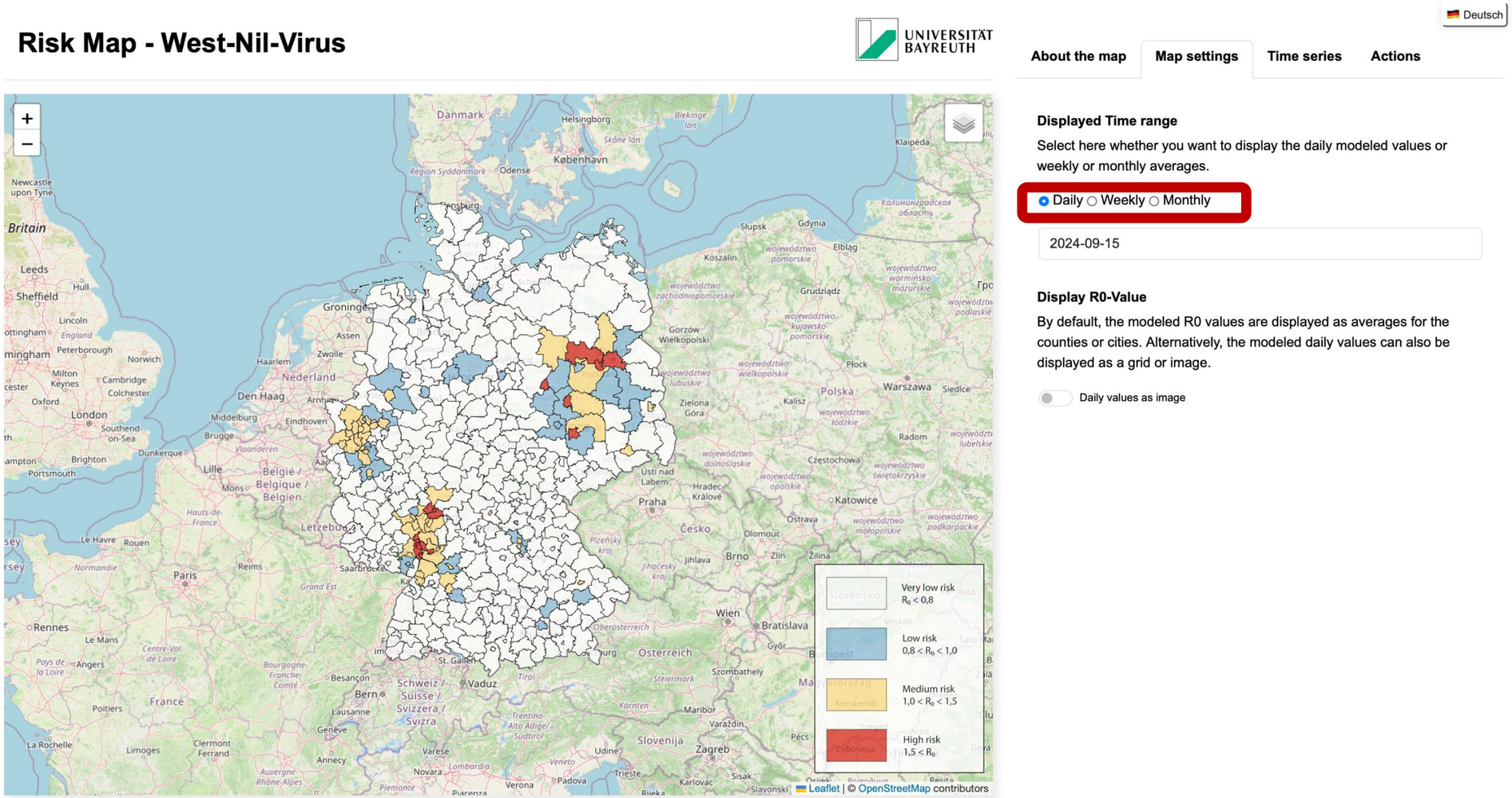


BayByeMos is a project of the Department of Biogeography and the Institute for Medical Management and Health Sciences of the University of Bayreuth.
The project is funded as part of the joint project "Climate Change and Health" in Bavaria (VKG).

biogeografie IMG

# Dashboard: West Nile Virus transmission risk

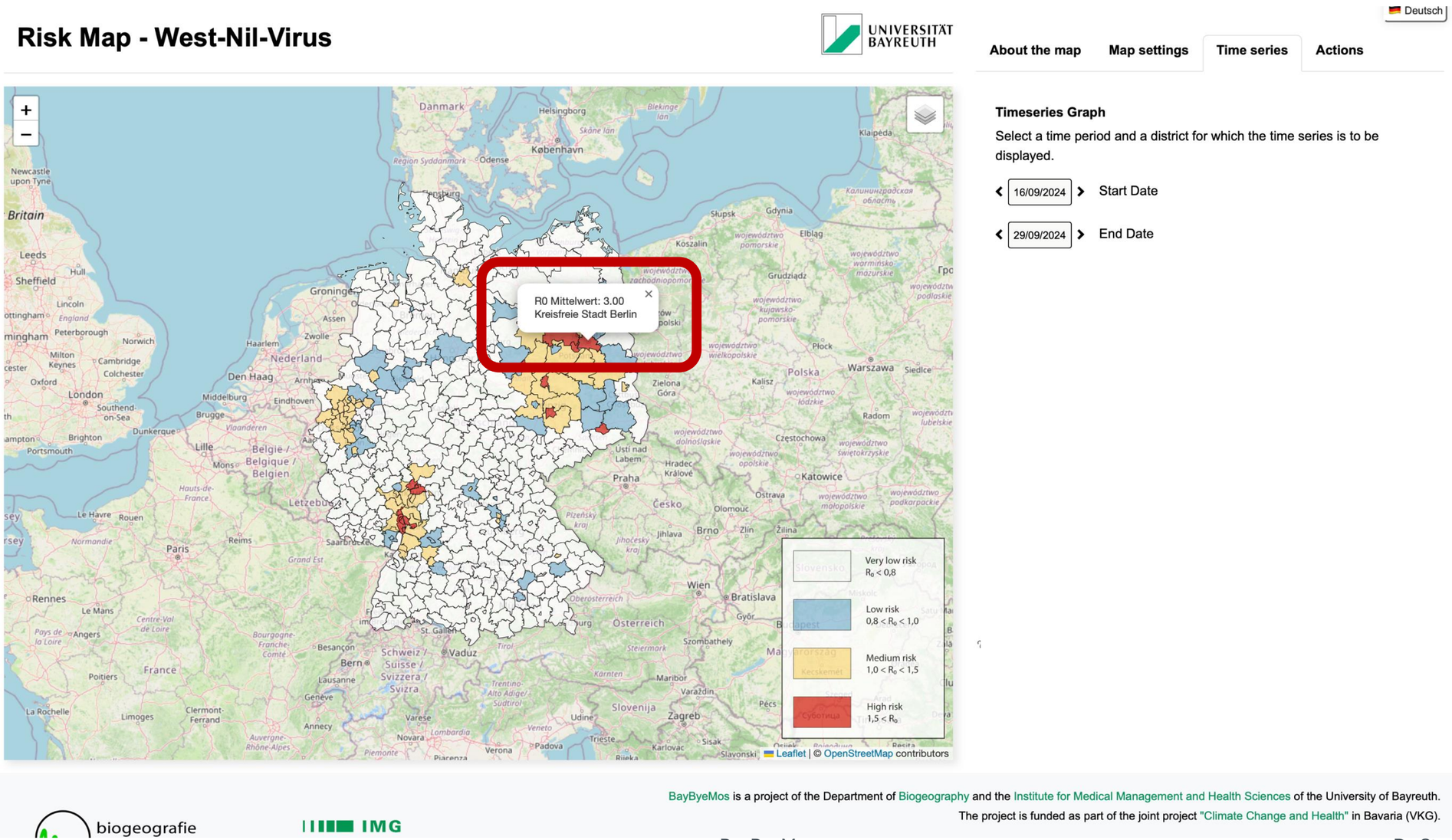


BayByeMos is a project of the Department of Biogeography and the Institute for Medical Management and Health Sciences of the University of Bayreuth.
The project is funded as part of the joint project "Climate Change and Health" in Bavaria (VKG).

biogeografie IMG

# Dashboard: West Nile Virus transmission risk

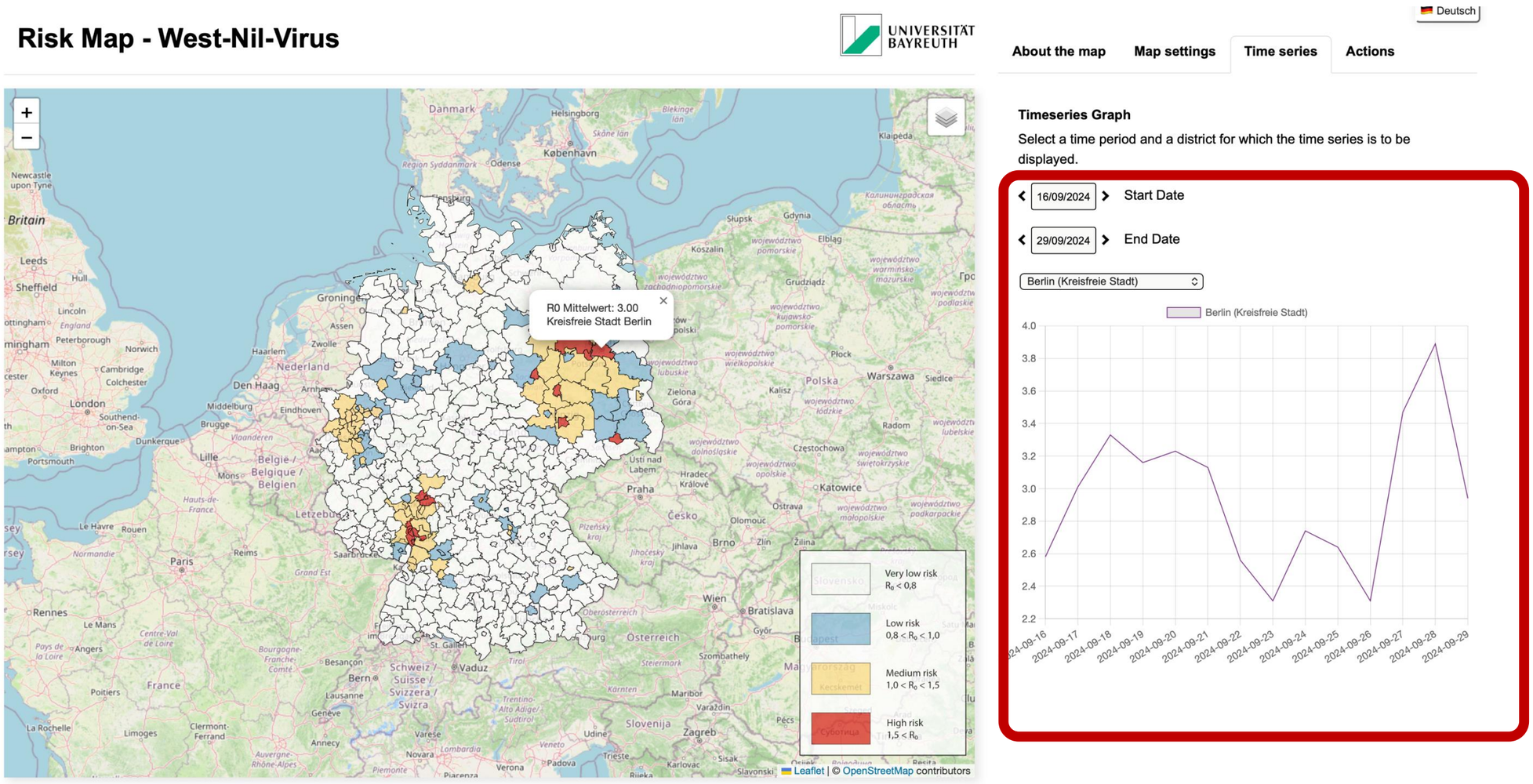


BayByeMos is a project of the Department of Biogeography and the Institute for Medical Management and Health Sciences of the University of Bayreuth.
The project is funded as part of the joint project "Climate Change and Health" in Bavaria (VKG).

biogeografie IMG

# Dashboard: West Nile Virus transmission risk

## Risk Map - West-Nil-Virus

UNIVERSITÄT BAYREUTH

Deutsch

About the map | Map settings | Time series | Actions

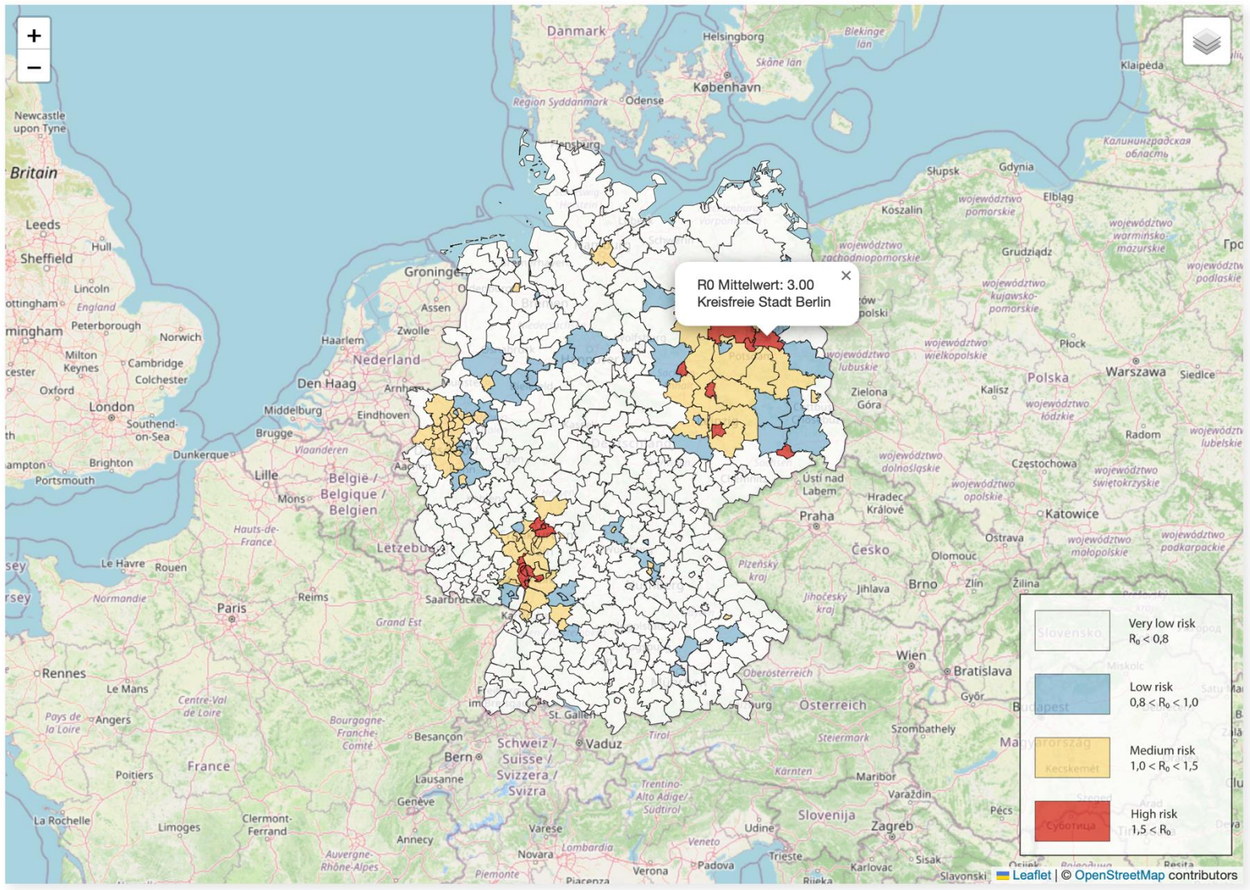


**Protective measures**

The best protection against West Nile virus infection is to avoid mosquito bites. Particularly vulnerable individuals should observe the following precautions:

- Avoid staying outdoors at dusk and at night when mosquitoes are most active.
- Wear light-colored, long-sleeved clothing to avoid bites.
- Use additional mosquito repellents.
- Install fly screens on windows and doors to keep mosquitoes out.
- Remove or cover standing water near your living area to minimize breeding grounds for mosquitoes.

Further information is available on these pages:
Robert-Koch-Institute
Infection control - West-Nile-Virus

BayByeMos is a project of the Department of Biogeography and the Institute for Medical Management and Health Sciences of the University of Bayreuth.
The project is funded as part of the joint project "Climate Change and Health" in Bavaria (VKG).

biogeografie IMG

# Dashboard: West Nile Virus transmission risk

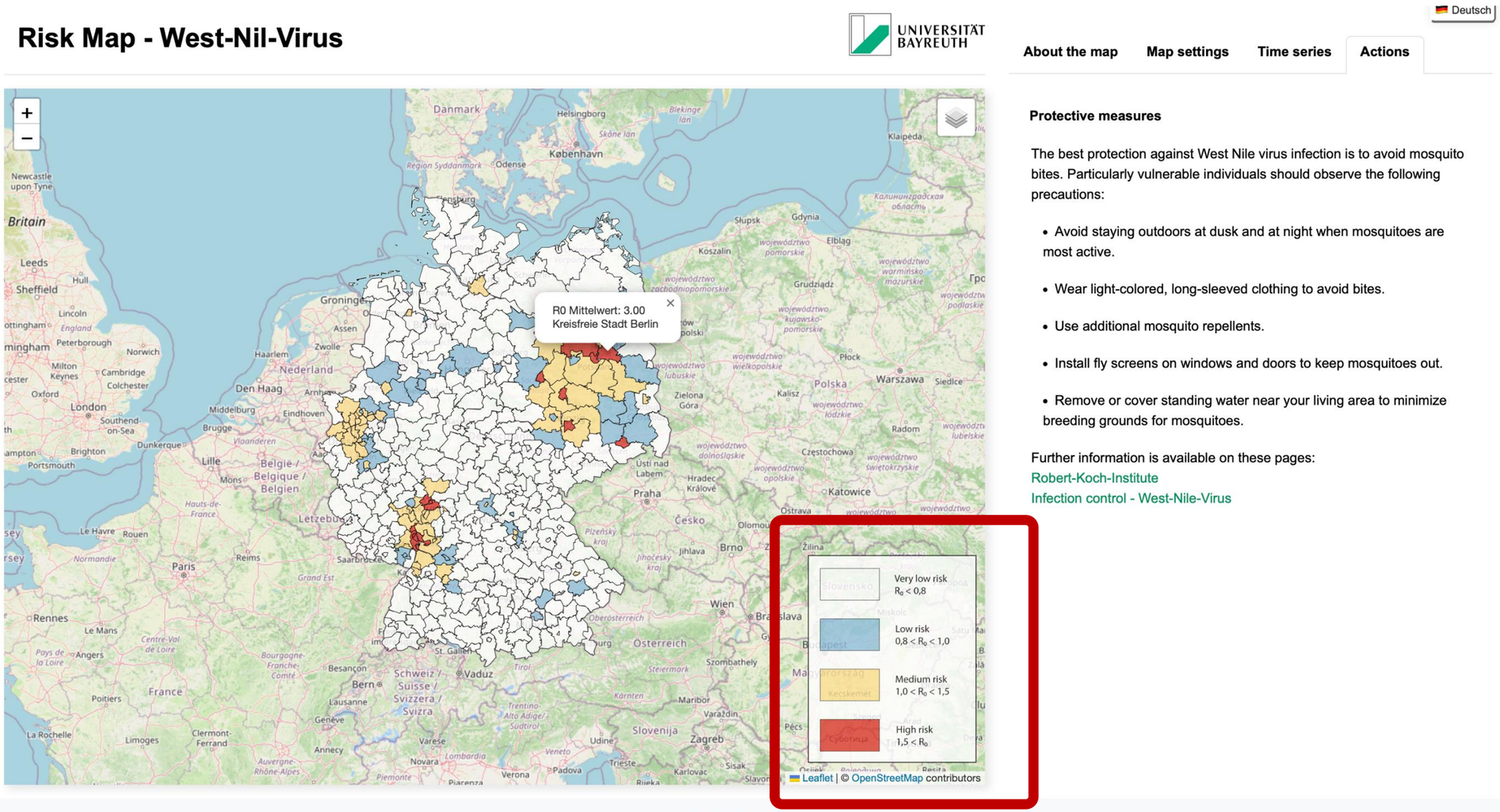

# Potential users: Quantitative and qualitative surveys

*"I may well be wrong in my assessment, but with an **R value below 0.8,** I would not say there is no risk (to individuals). […] However, individual people, particularly those at increased risk […], can still become infected. It could therefore be **misleading to say there is no risk.**"*

*"General information on **preventive measures**"*

*"clear guidance on **symptoms** that may arise, **protective measures** and how to behave"*

*'I haven't found a **scoring system**'*



*"The **symptoms** of the condition are not described in detail. You **have to find this out via the link to another website**."*

Participants' responses in free-text fields

# Methods: West Nile Virus transmission risk

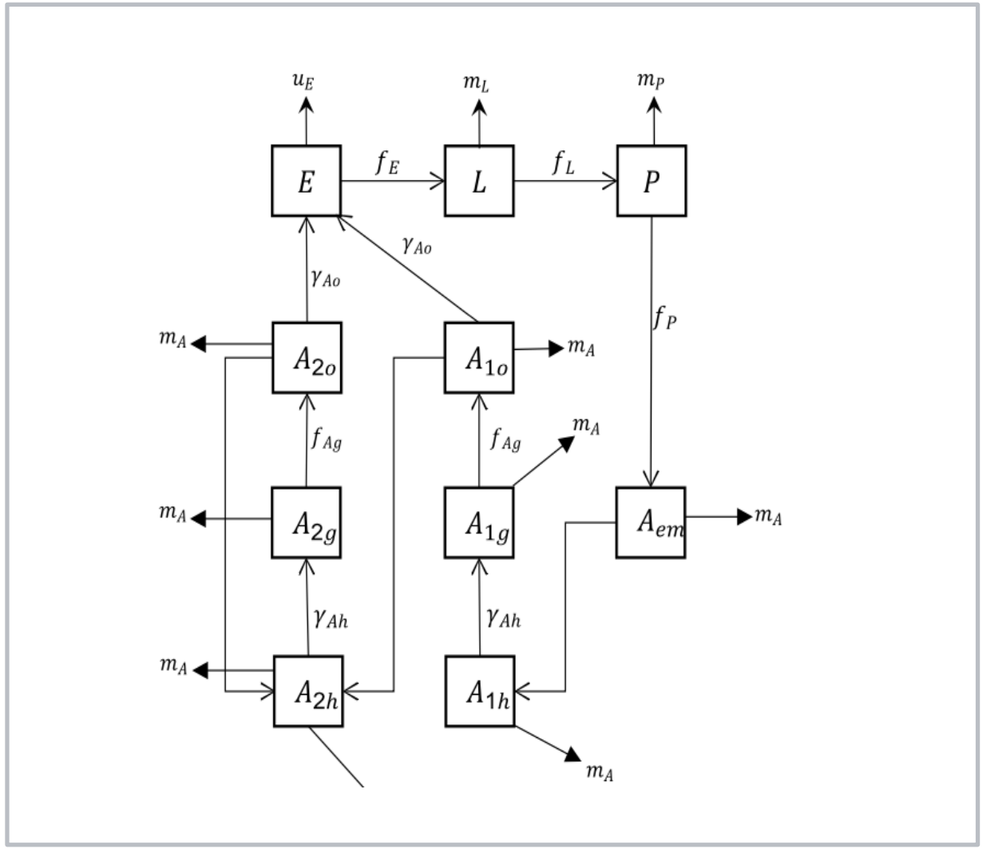





***Culex pipiens* mosquito population**

# Methods: West Nile Virus transmission risk




Northern Goshawk
*Astur gentilis gentilis*




Hooded crow
*Corvus cornix*

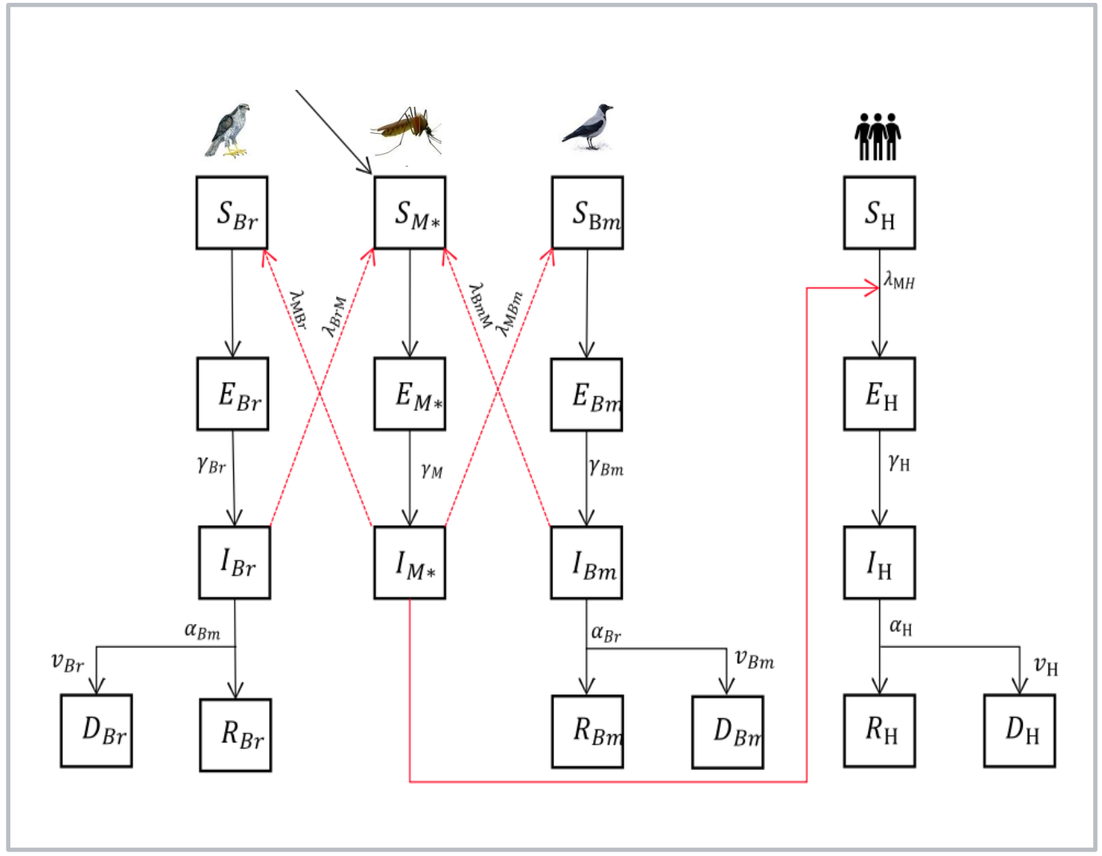


**Pathogen transmission**

# Methods: West Nile Virus transmission risk

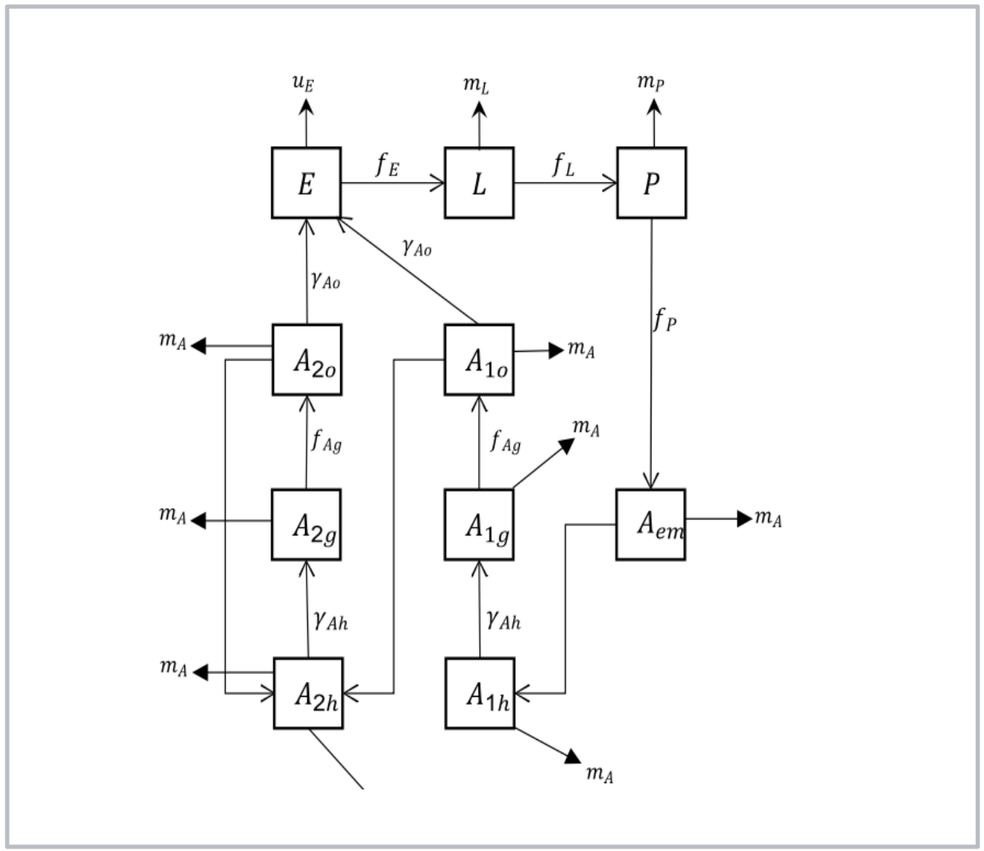


***Culex pipiens* mosquito population**

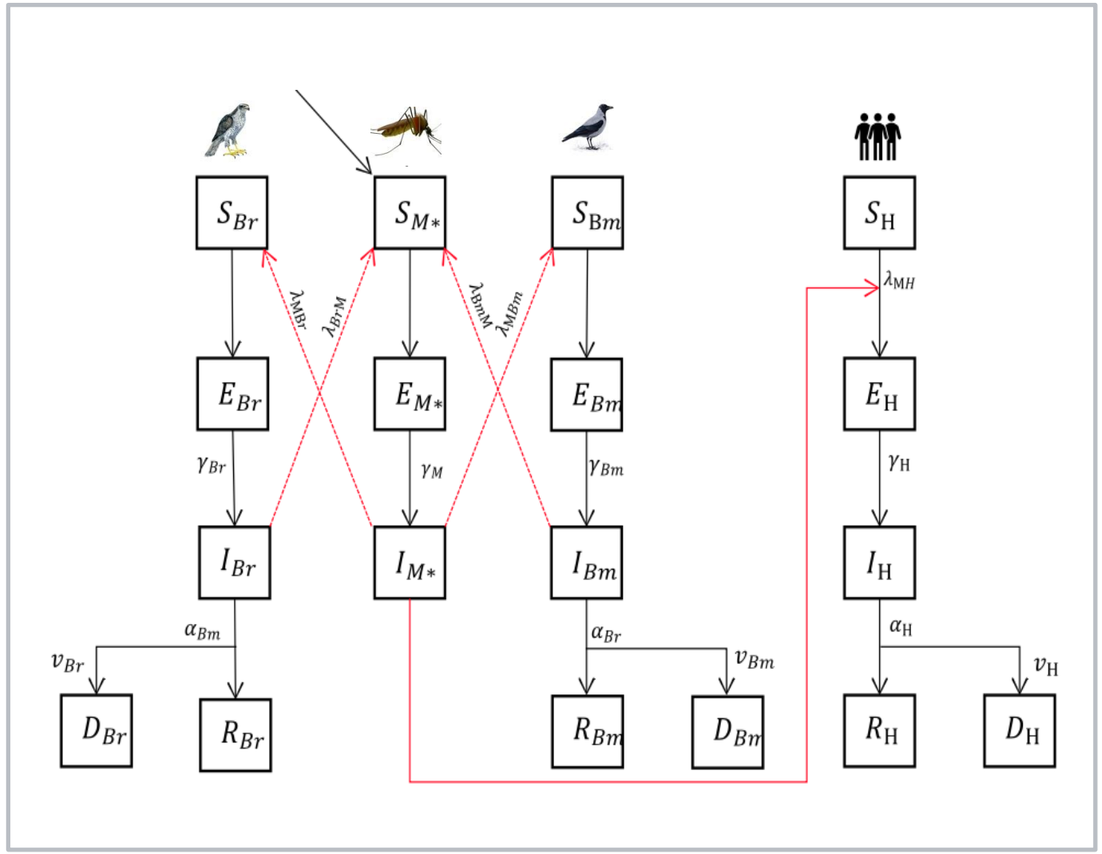


**Pathogen transmission**

# Methods: West Nile Virus transmission risk

$$\boldsymbol{M}(T) = \frac{EV(T)pO(T)EFGC(T)pEA(T)MDR(T)}{\mu(T)^2}$$

| | |
|---|---|
| $\boldsymbol{M}$ | Mosquito density |
| $EV$ | Hatching rate |
| $pO$ | Proportion of egg-laying |
| $pEA$ | Survival rate of eggs, larvae and pupae |
| $MDR$ | Mosquito development rate |
| EFGC | Eggs per female per gonotrophic cycle |

$$\boldsymbol{R0}(T) = \frac{M(T)a^2bc(T)e^{-\mu EIP(T)}}{Nr\mu(T)}$$

| | |
|---|---|
| $\boldsymbol{R0}$ | Basic reproduction number |
| $\boldsymbol{M}$ | Mosquito density |
| $a$ | Biting rate |
| $bc$ | Vector competence |
| $\mu$ | Mortality rate of adult mosquitoes |
| $EIP$ | Extrinsic incubation period |
| N | Number of hosts |
| $r$ | Host recovery rate |

# Risk maps: *Aedes albopictus* population establishment



Nuremberg

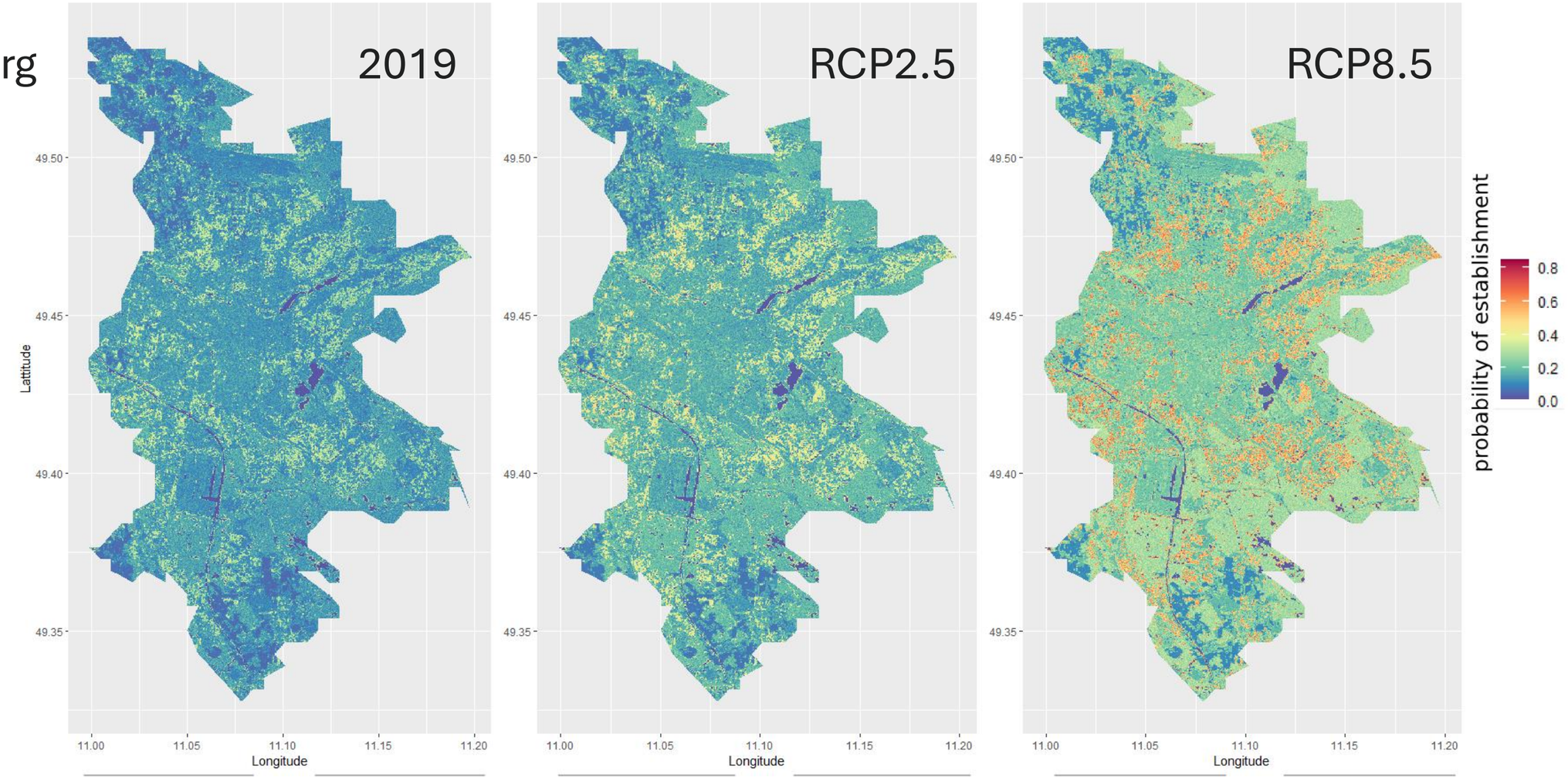

# Data: Temperature

- MODIS LST temperature data + (DEM, latitude, slope, albedo), 10 m, daily, regression using machine learning
- VIIRS LST temperature data + (DEM + HYRAS temperature data), 50 m, monthly, regression using machine learning
- HYRAS temperature data (DWD), 1 km, daily, non-Euclidean interpolation, used for validation

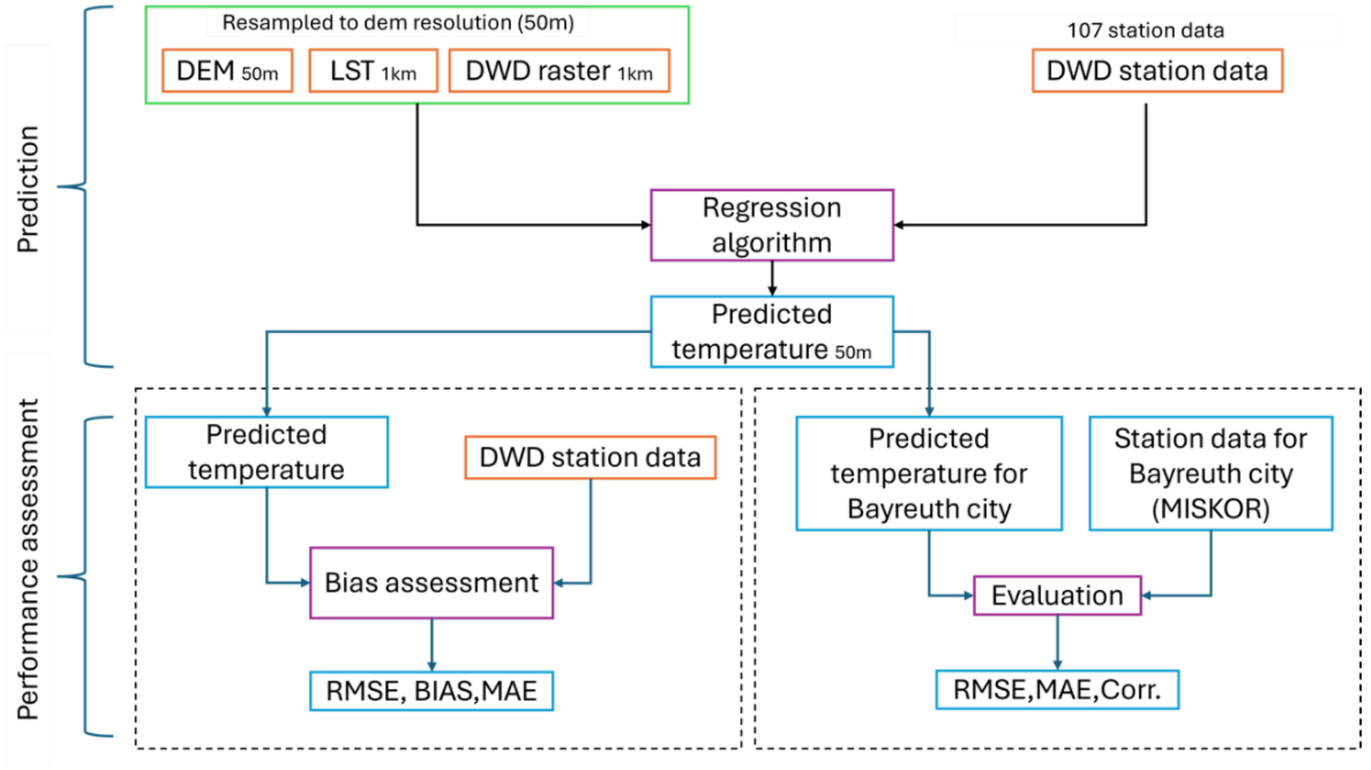


Model of the downscaling process for VIIRS LST data, comprising the stages of pre-processing, forecasting and validation.
DEM = Digital Elevation Model, LST = Land Surface Temperature VIIRS.

# Data: Temperature at city scale

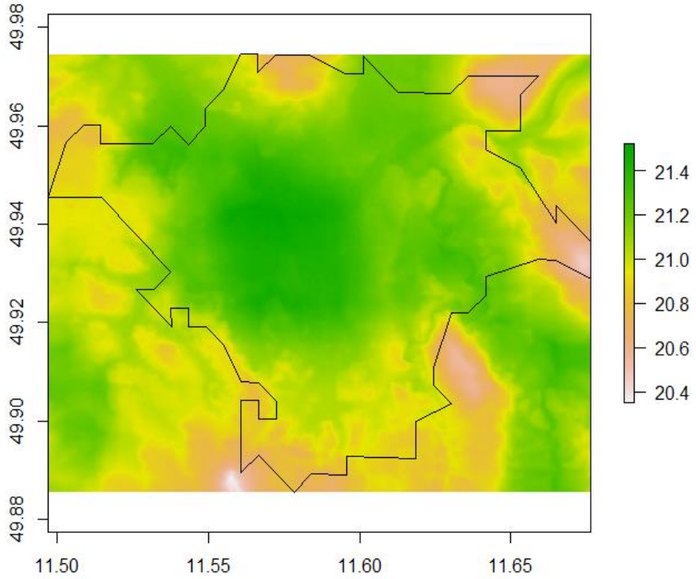


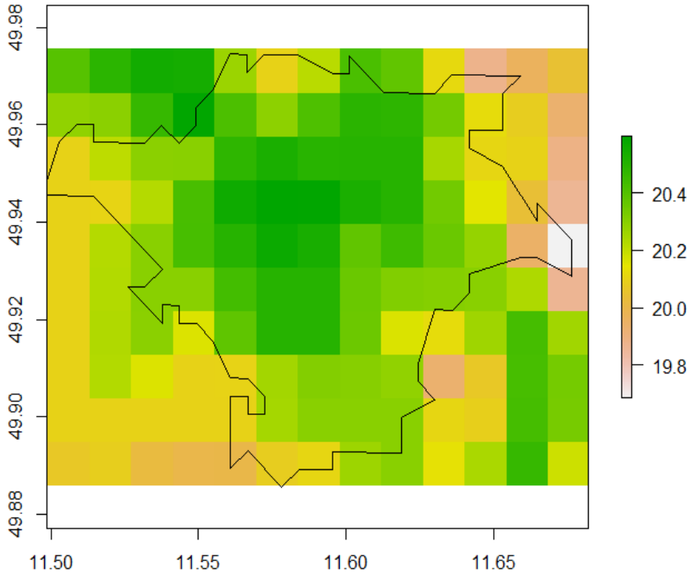


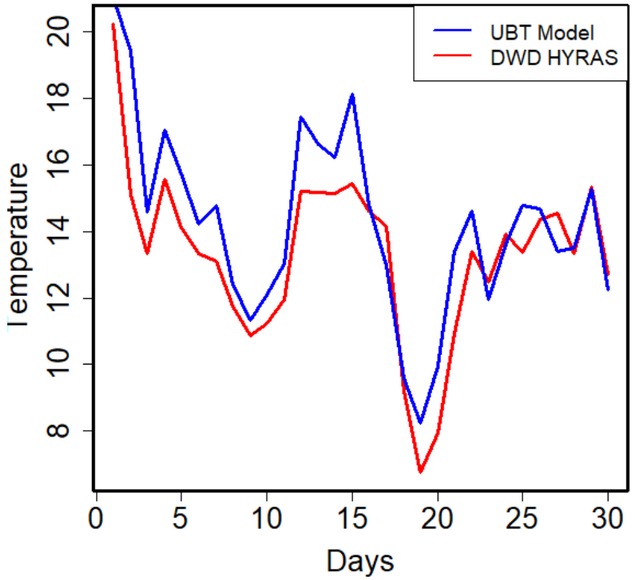

# Methods: Weighting of Land Cover Classes



**Expert Surveys (n=15) of leading scientists in the field**

- Breeding sites and reproductive behaviour

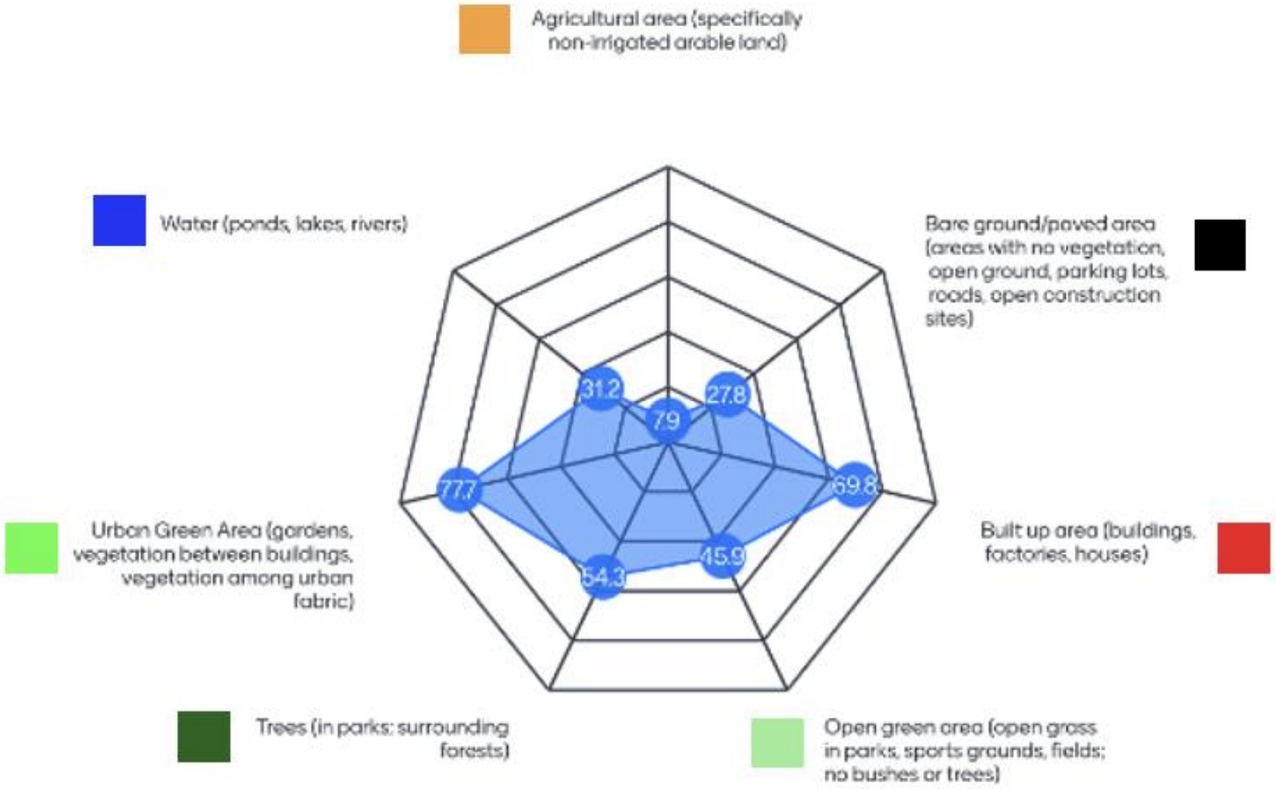


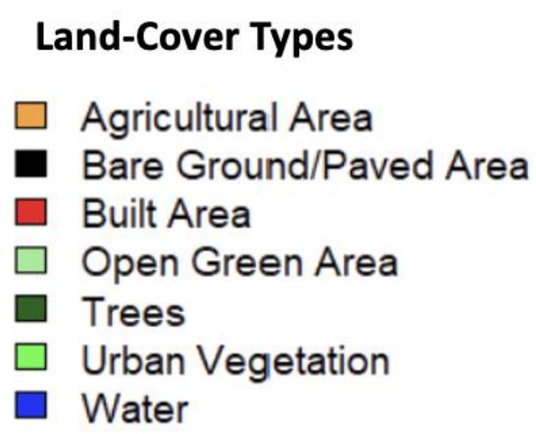

# Methods: *Aedes albopictus* population establishment



Temperature (Air): Remote Sensing mean Aug-Oct

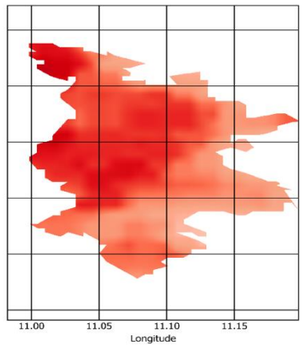


1. dynam Aedes[1]

2. model

Integration of Land Cover

Establishment Probability

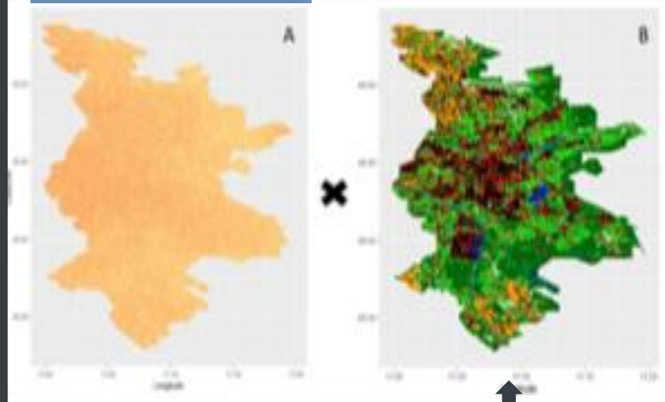


Suitable areas: *Ae. albopictus*

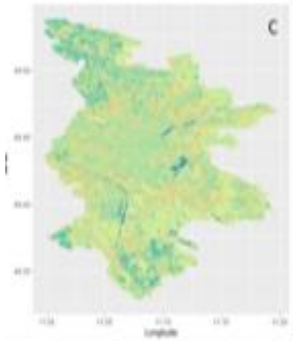


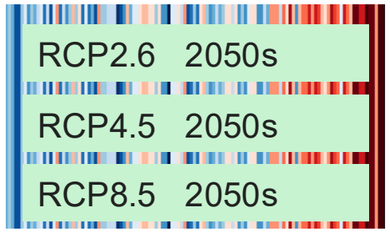


| Land-Cover Type | Weight |
|---|---|
| Agricultural area | 0.17 |
| Bare ground/paved area | 0.35 |
| Built up area | 0.44 |
| Open green area | 0.31 |
| Trees | 0.48 |
| Urban green area | 0.94 |
| Water | 0.04 |

Eight Bavarian cities:

- Augsburg
- Bayreuth
- Fürth
- Ingolstadt
- Munich
- Nuremberg
- Regensburg
- Würzburg

[1]Da Re, D., et al. dynamAedes. Parasites Vectors 15, 414 (2022).

# Risk maps: Chikungunya Virus transmission risk

Munich

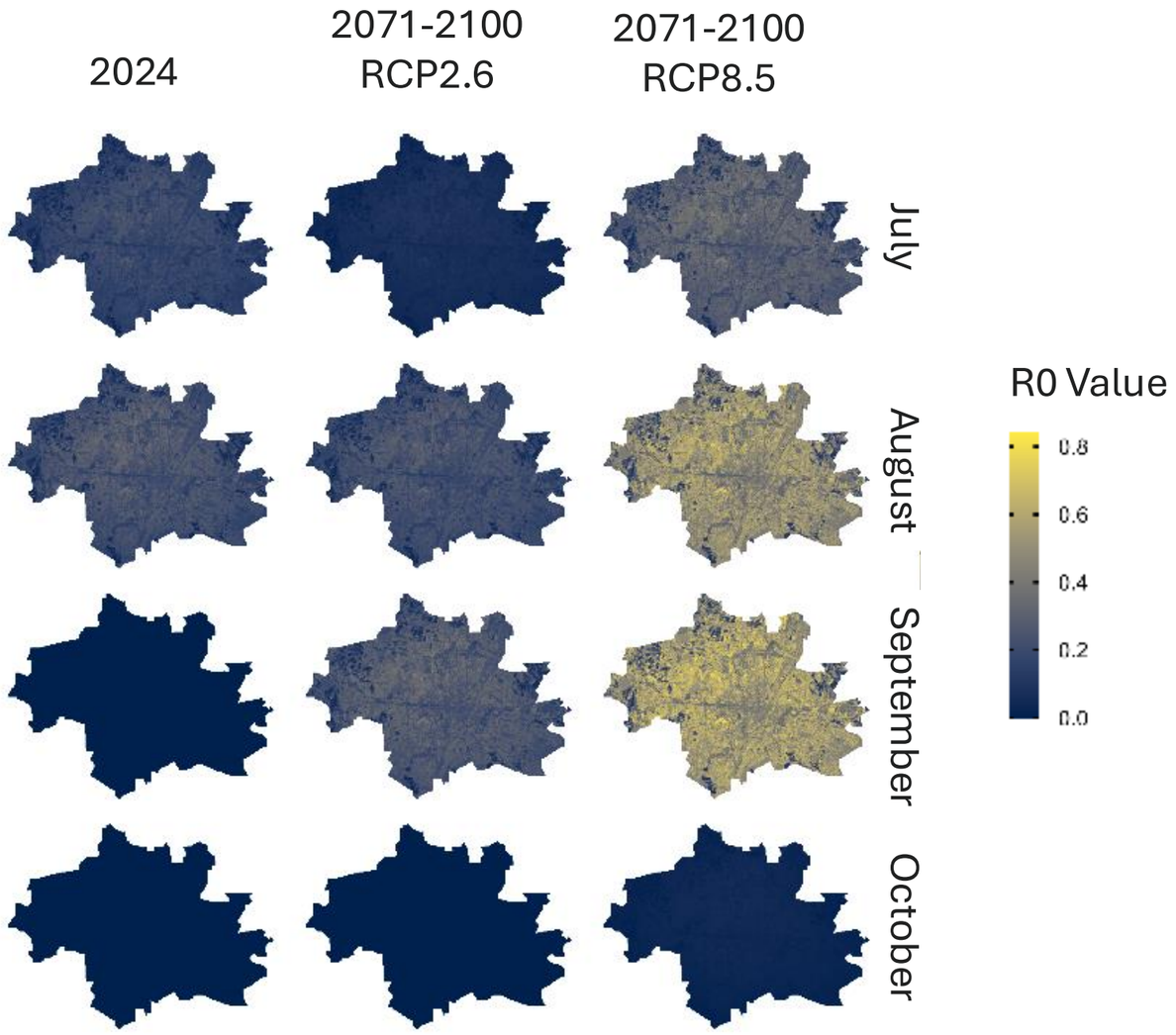

# Methods: Chikungunya Virus transmission risk

- The mosquito population M is estimated using a temperature-dependent, nonlinear equation

$$\boldsymbol{M}(T) = \frac{EV(T)pO(T)EFGC(T)pEA(T)MDR(T)}{\mu(T)^2}$$

- Ross-Macdonald equation: $R_0$ calculated using a closed-form algebraic formula

$$\boldsymbol{R0}(T) = \frac{M(T)a^2bc(T)e^{-\mu EIP(T)}}{Nr\mu(T)}$$

# Summary

## Support Public Health Authorities

- Inform about current and potential future areas at risk
- Enable to propose appropriate measures
- Enable joint activities of counties that are also affected
- Supporting the information of medical community and interested public

## Support Researchers

- No download of environmental data used or outcomes yet
  -> contact us
- Comparison of risk in neighbouring regions or different models used

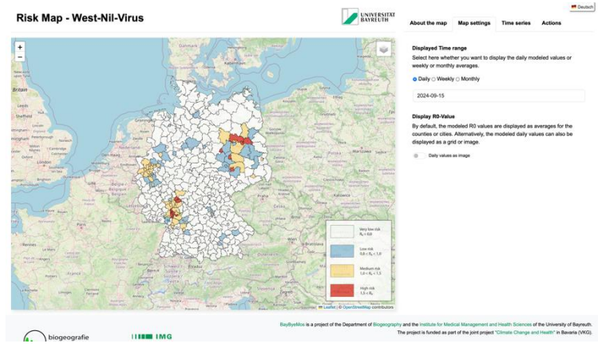


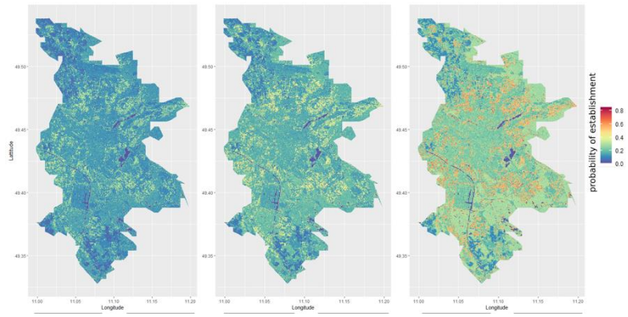


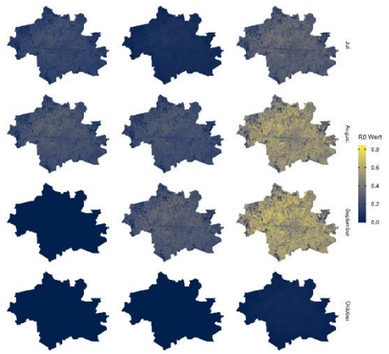

# Dashboard: Ready-to-use?

- No funding for maintaining the platform or transfer to one of the state offices.

But....

- Historical information WNV risk in Germany up to 2024
- Future risk assessments (WNV, CHIKV, Aedes) for 8 Bavarian cities
- Information about disease and preventive measures

Follow up project...

# Dashboard: Follow up!

## WNV combat [2026 – 2031] at city level Berlin



**Monitoring**
of wild birds, mosquitoes, environ. conditions, human infections

**Models**
linking data, identifying patterns, assessing risks

**Risk maps**
For targeted measures and better protection

# Science communication for children

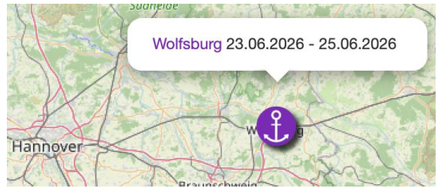





## Die Uni Bayreuth auf der MS Wissenschaft 2026






## With a marble run, magnifying glasses, and an animated film

Bayreuth's contribution to the interactive exhibition provides a playful introduction to planetary health and mosquitoes

# A big thank you goes to …

- **Current Team:** Prof. Dr. Manuel Steinbauer, Dr. med. Alina Domdey, Oliver Mbaoma, Lukas Nietsch, Ridwan Shittu
- **Former Colleagues:** Prof. Dr. em. Carl Beierkuhnlein, Dr. Nils Tjaden, Prof. Dr. Yanchao Cheng, Emmanuelle Adeleke, Reinhold Stahlmann
- **Master Students:**
  MSc Global Change Ecology within the Elite network of Bavaria
  MSc Environment, Climate Change and Health
- **Colleagues IMG:** Dr. Sarah Heidenreiter, Florian Hinz

Contact: **stephanie.thomas@uni-bayreuth.de - or via linkedin**



ecdc EUROPEAN CENTRE FOR DISEASE PREVENTION AND CONTROL

biodiversa+ European Biodiversity Partnership

DFG Deutsche Forschungsgemeinschaft

Bundesministerium für Forschung, Technologie und Raumfahrt

One Health Platform

Bayerisches Staatsministerium für Umwelt und Verbraucherschutz
Bayerisches Staatsministerium für Gesundheit und Pflege

# Some of our publications for further reading

Mbaoma, O. C., Thomas, S. M., & Beierkuhnlein, C. (2024). Spatiotemporally Explicit Epidemic Model for West Nile Virus Outbreak in Germany: An Inversely Calibrated Approach. Journal of Epidemiology and Global Health, 14(3), 1052-1070.

Mbaoma, O. C., Thomas, S. M., & Beierkuhnlein, C. (2025). Significance of vertical transmission of arboviruses in mosquito-borne disease epidemiology. Parasites & Vectors, 18(1), 137.

Domdey, A J; Thomas, S M: Klimawandel und vektorübertragene Erkrankungen – Bedeutung für die Intensiv- und Notfallmedizin, Medizinische Klinik - Intensivmedizin und Notfallmedizin (2024), online: 18.11.2024, doi:10.1007/s00063-024-01206-z

Thomas, S M: Invasive alien species: a rising global threat that needs control, *The Lancet Planetary Health*, 7(11), e875-e876 (2023), doi:10.1016/S2542-5196(23)00233-4